HORN SPEAKER
FYH-750

General Specification	
Type	FYH-750
Frequency Response	380Hz-6.5KHz
Sensitivity	109±3dB
SPL	116dB 100V 15W
Rated Power	50W
Power Taps	25W/50W
Line input	100V
Dimension(mm)	Φ325*350
Physical Specification	
Material	Aluminum
Finished Colour	Grey
Unit Weight	2.58Kg
Gross Weight	15.3Kg/4PCS
Packing Dimension(cm)	73*37*77
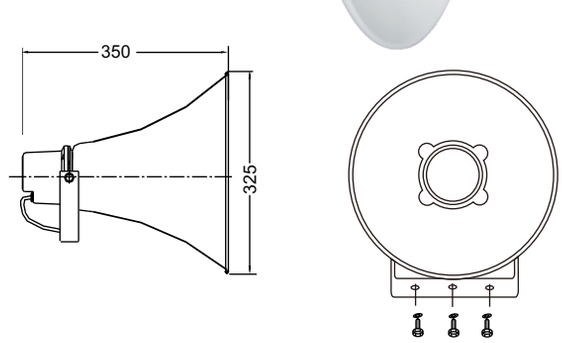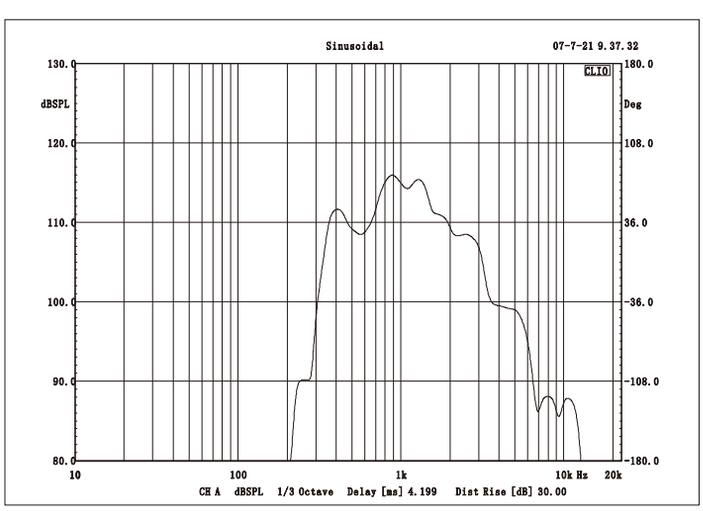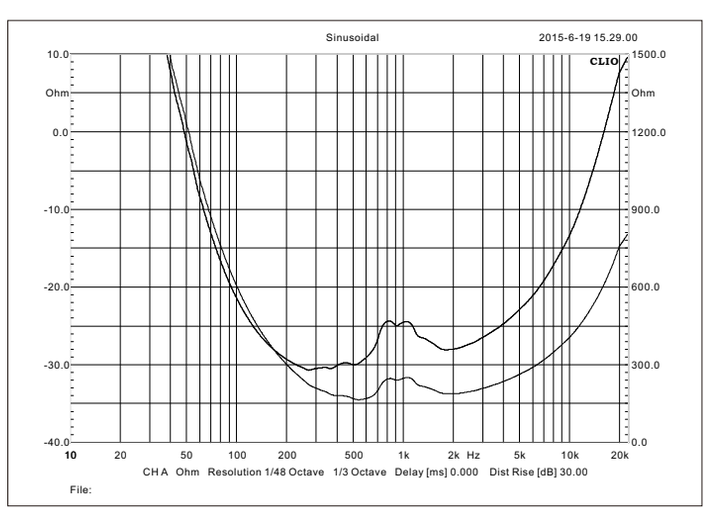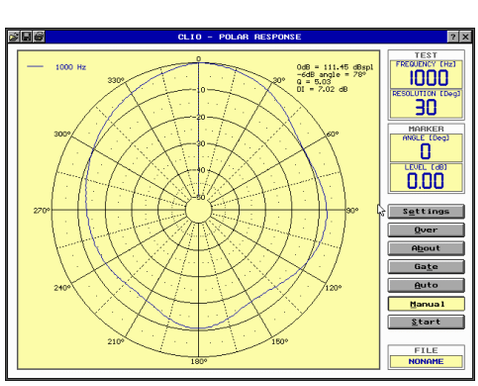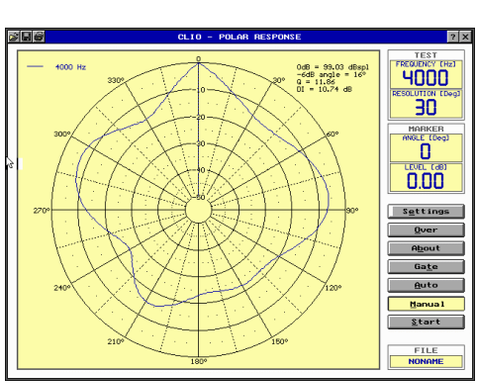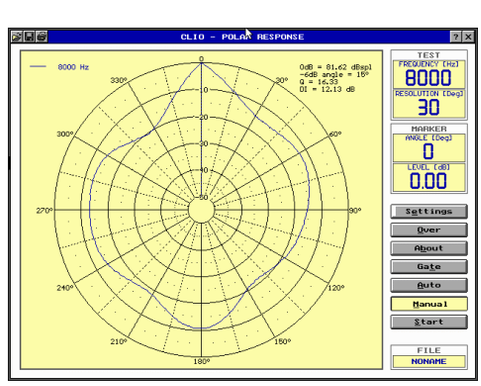
(IP66)